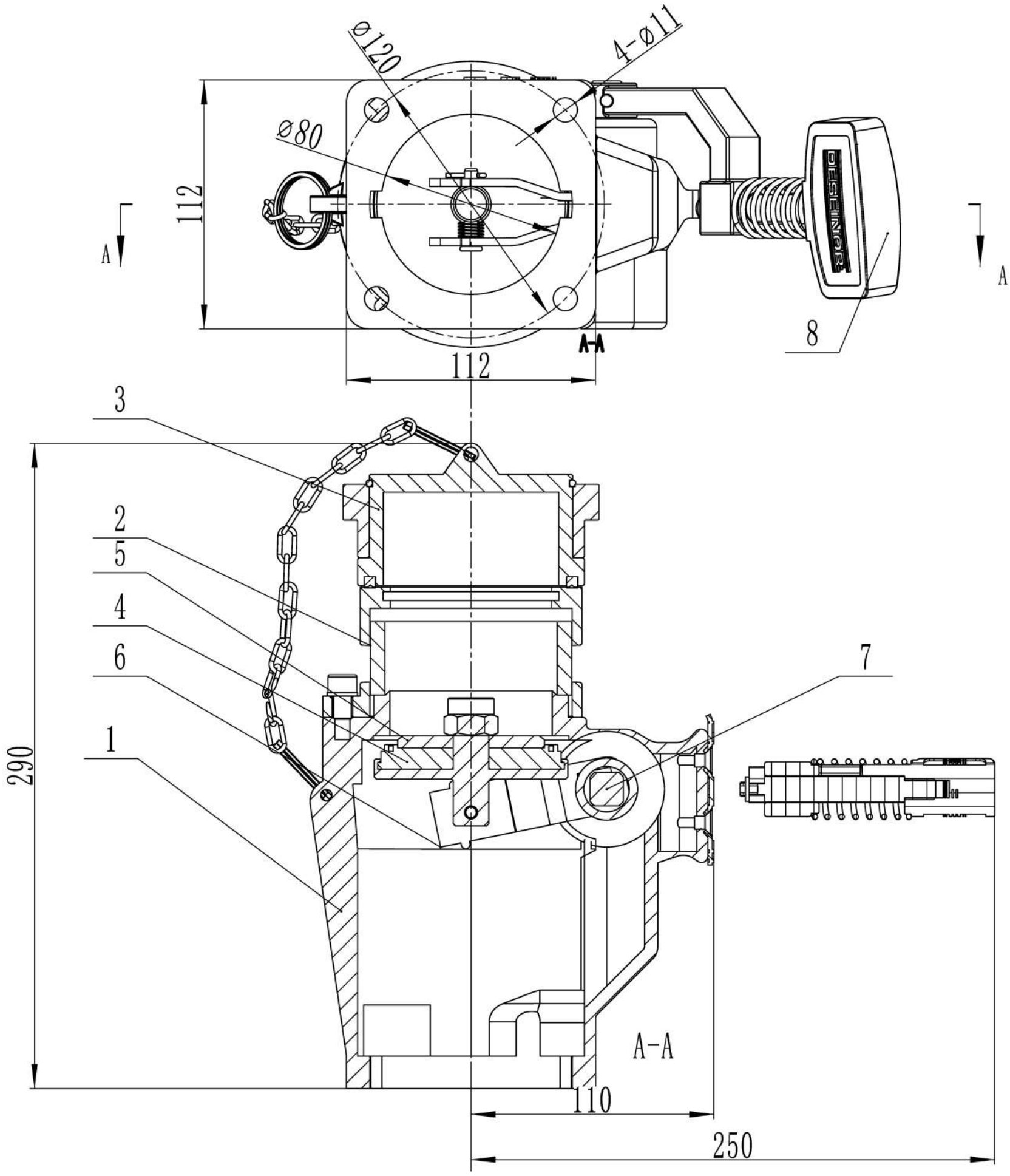

Category	Material number	Description	Quantity	Category	Material number	Description	Quantity
1	GY616-01	valve body	1	5	GY616-05	gasket	1
2	GY616-02	connector	1	6	GY616-06	paddle	2
3	GY616-03	upper cover	1	7	GY616-07	stem	1
4	GY616-04	valve flap	1	8	GY616-08	handle	1

Technical requirements: 1. Chamfer not marked C0.5	Specification Model			Material	Heat treatment	Surface treatment
	3 inch			aluminum alloy		anodized
	Date	Scale	Weight	Quantity	Name	pineapple valve
	2025. 2. 18			1		
	Person in charge	Approved	Revised	Drawing	Figure number	GY616
				Guomingcai		
DESEINOR	View		Pattern Mark	Total 1	Page 1	Xuzhou Desheng Petroleum Machinery Co., Ltd.