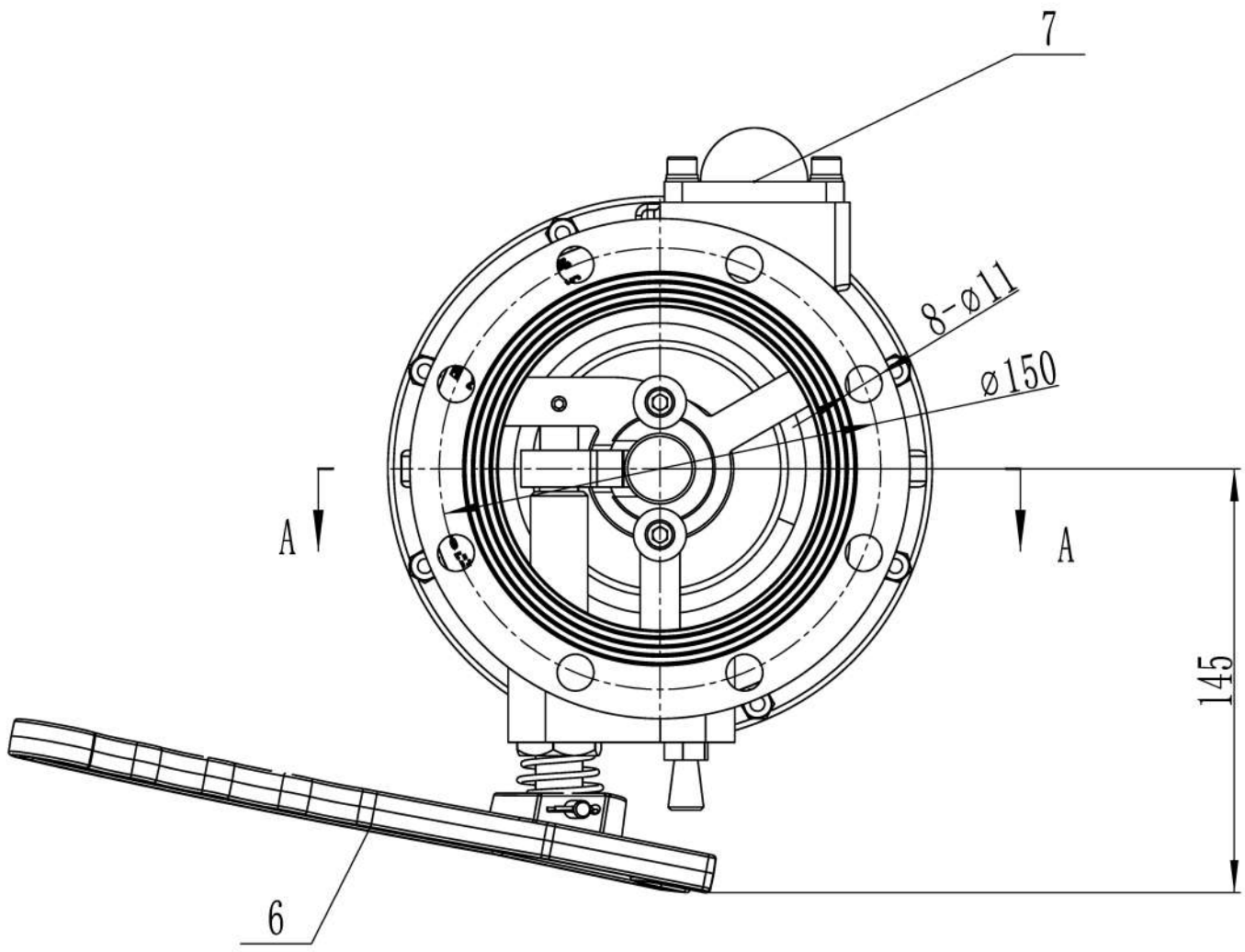


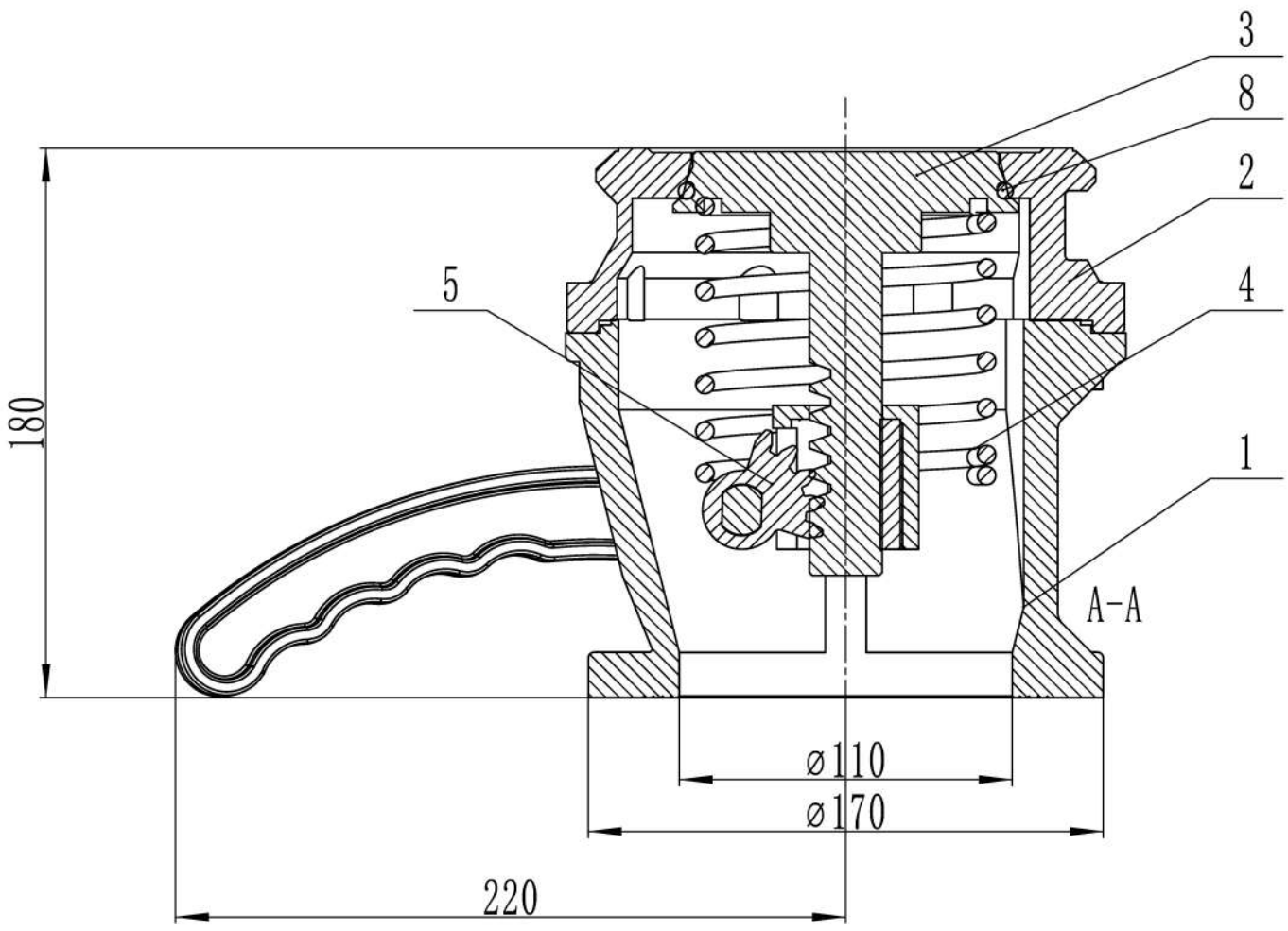


| Category | Material number | Description | Quantity | Category | Material number | Description | Quantity |
|---|---|---|---|---|---|---|---|
| 1 | XYF-100B-01 | valve body | 1 | 5 | XYF-100B-05 | tooth | 1 |
| 2 | XYF-100B-02 | upper cover | 1 | 6 | XYF-100B-06 | handle | 1 |
| 3 | XYF-100B-03 | valve flap | 1 | 7 | XYF-100B-07 | seal | 1 |
| 4 | XYF-100B-04 | spring | 1 | 8 | XYF-100B-08 | | 1 |

| Technical requirements: 1. Chamfer not marked C0.5 | Specification Model | | | Material | Heat treatment | Surface treatment |
|---|---|---|---|---|---|---|
| | 4 inch | | | aluminum alloy | | anodized |
| | Date | Scale | Weight | Quantity | Name | ball valve (round sight glass) |
| | 2025. 2. 18 | | | 1 | | |
| | Person in charge | Approved | Revised | Drawing | Figure number | XYF-100B |
| | | | | Guomingcai | | |

| DESEINOR | View | Pattern Mark | Total 1 | Page 1 | Xuzhou Desheng Petroleum Machinery Co., Ltd. |
|---|---|---|---|---|---|